SUSPENSION, REAR CARRIER AND HUB - Z26S4D92AN/AH/BN/BH (C750129)

2026 RZR - RZR PRO S4 ULTIMATE (R01) - Z26S4D92AN/AH/BN/BH

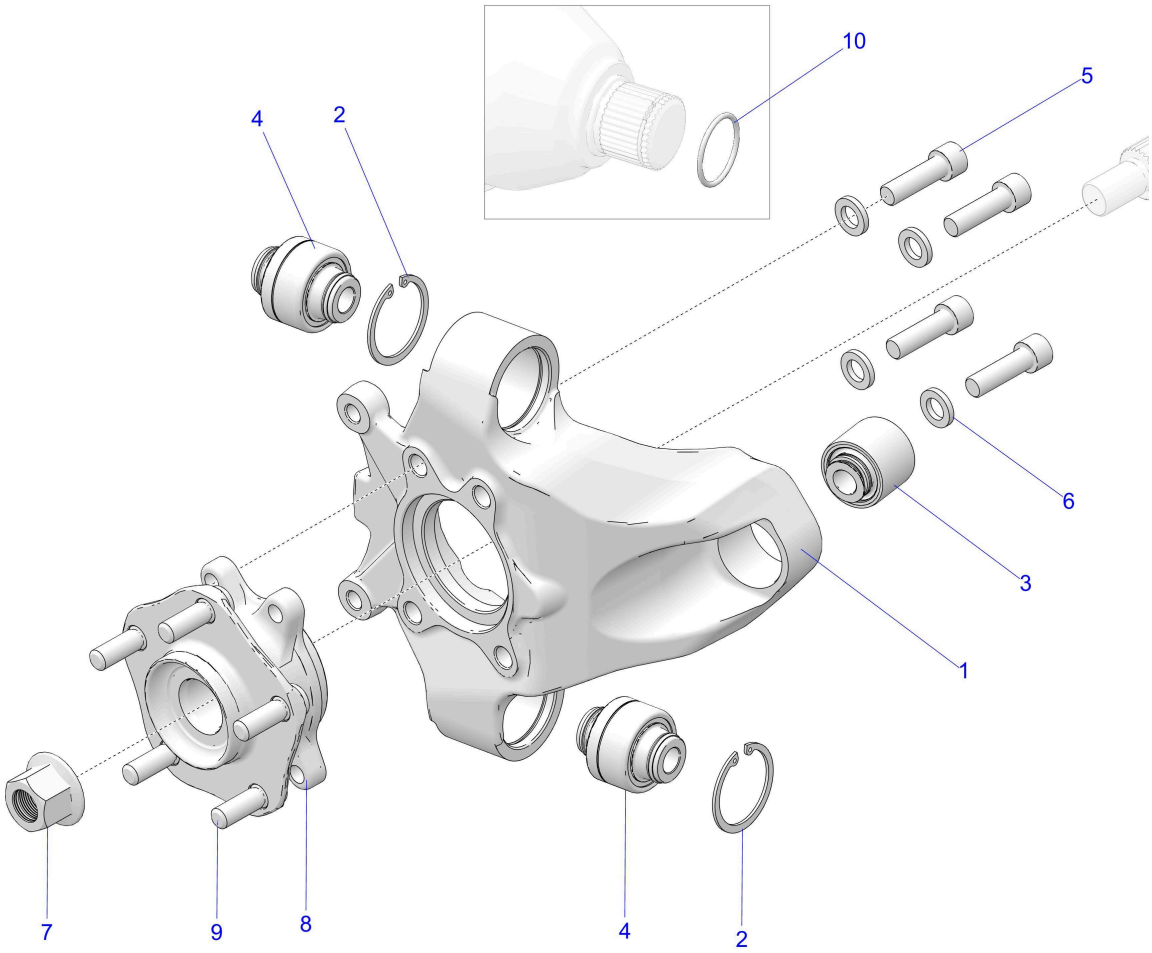

© 2023 Polaris Industries Inc.

C750129

Reference #	*Part#*	*Description*	*Quantity*
	1524048	ASM-KNUCKLE,REAR,LH [INCL. 1-6]	1
	1524049	ASM-KNUCKLE,REAR,RH [INCL. 1-6]	1
1	1544548	ASM REAR KNUCKLE LH [INCL. 2-4]	1
1	1544549	ASM REAR KNUCKLE RH [INCL. 2-4]	1
1	1545109	ASM REAR KNUCKLE RACE LH [RACE/HD OPTION]	1
1	1545110	ASM REAR KNUCKLE RACE RH [RACE/HD OPTION]	1
2	7082583	BEARING-SPHERICAL, M14,47X55	2
3	7082584	BEARING-SPHERICAL, M14,40X44	1
4	7710947	RING-SNAP,DIN472,47X1.75MM	2
5	7521356	SCR-SH-M12X1.25X40 12.9 PTCH	4
6	7557160	WSHR-22X13X3 ZFB HRD	4
7	7548051	NUT-M20X1.5,FLG-LCK,ZINC,8.8	1
8	1525346	ASM-UNITIZED HUB 5X4.5 [INCL. 9]	1
9	7527823	STUD-WHEEL,M12-1.5	5
10	3610355	SEAL-O-RING,2-125	1

Copyright 1996-2026 Polaris Industries U.S.A All rights reserved.